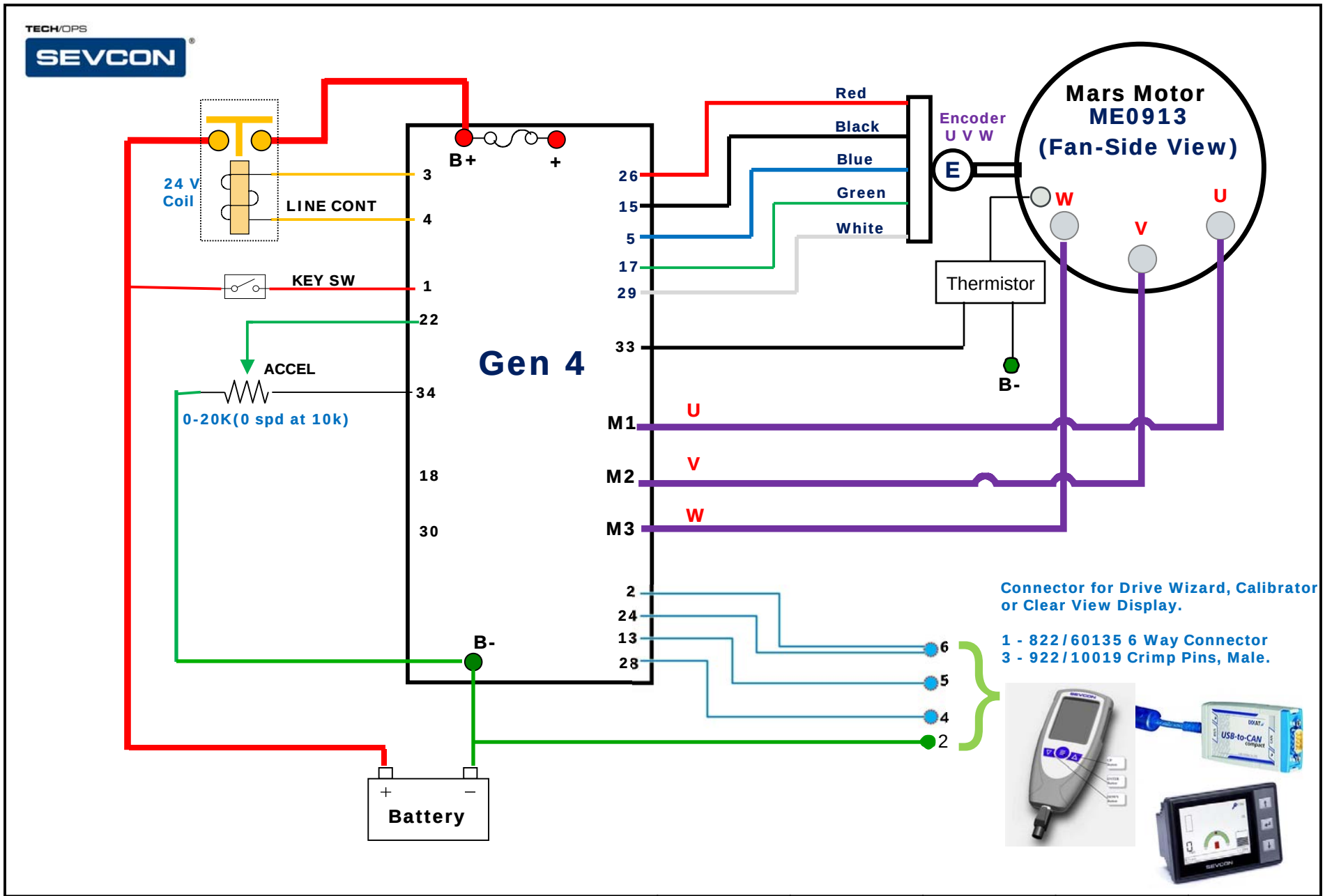

	DRAWN BY	CHECKED	DATE	SCALE	SHEET NO.
WIRING DIAGRAM ThunderStruck Wiring Gen4 to Mars ME0913 Motor	TSM	N/A	April 2012	Not	1 of 1